Apache
PIPELINE PRODUCTS

NEW APACHE pigPRO™ INDICATOR INSTALL GUIDE

Models 53, 55, 57 Base Model Install Height

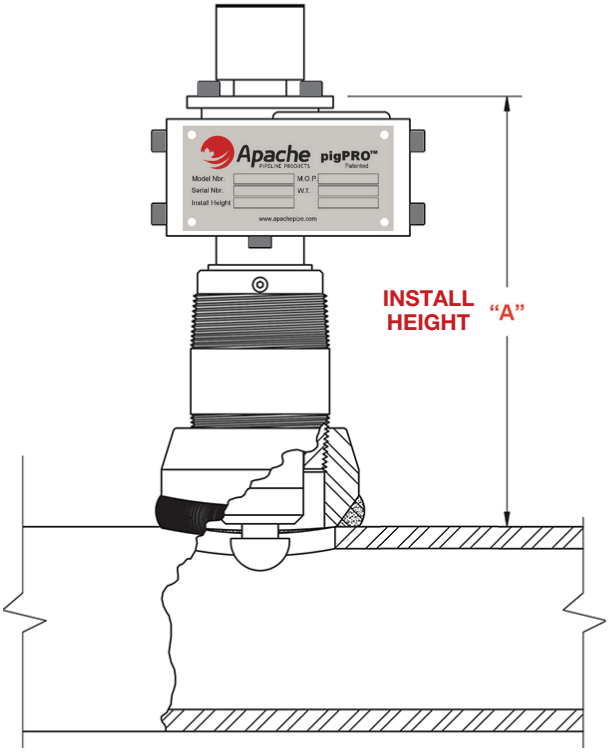

WALL THICKNESS		"A"	
0.125"	(3.18mm)	7 11/16"	(195mm)
0.141"	(3.58mm)	7 11/16"	(195mm)
0.156"	(3.96mm)	7 11/16"	(195mm)
0.172"	(4.37mm)	7 5/8"	(194mm)
0.188"	(4.78mm)	7 5/8"	(194mm)
0.219"	(5.56mm)	7 5/8"	(194mm)
0.250"	(6.35mm)	7 9/16"	(192mm)
0.281"	(7.14mm)	7 9/16"	(192mm)
0.300"	(7.62mm)	7 1/2"	(191mm)
0.312"	(7.92mm)	7 1/2"	(191mm)
0.330"	(8.38mm)	7 1/2"	(191mm)
0.344"	(8.74mm)	7 7/16"	(189mm)
0.375"	(9.52mm)	7 7/16"	(189mm)
0.406"	(10.31mm)	7 7/16"	(189mm)
0.438"	(11.13mm)	7 3/8"	(187mm)
0.500"	(12.70mm)	7 5/16"	(185mm)
0.531"	(13.49mm)	7 1/4"	(184mm)
0.600"	(15.24mm)	7 1/4"	(184mm)
0.625"	(15.88mm)	7 3/16"	(183mm)

Consult Factory if Wall Thickness Not Shown

1 Adjust Install Height

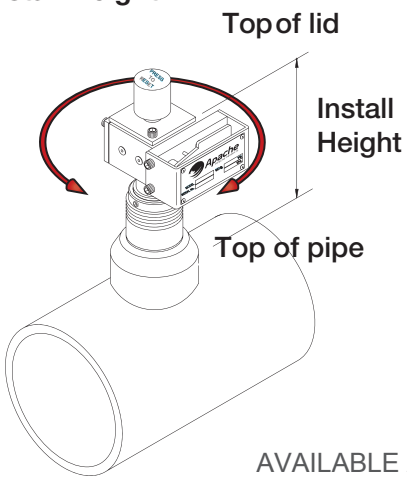

2 Using Supplied Allen Key, Tighten *INSTALL HEIGHT LOCK SCREW* to Secure Lower Housing

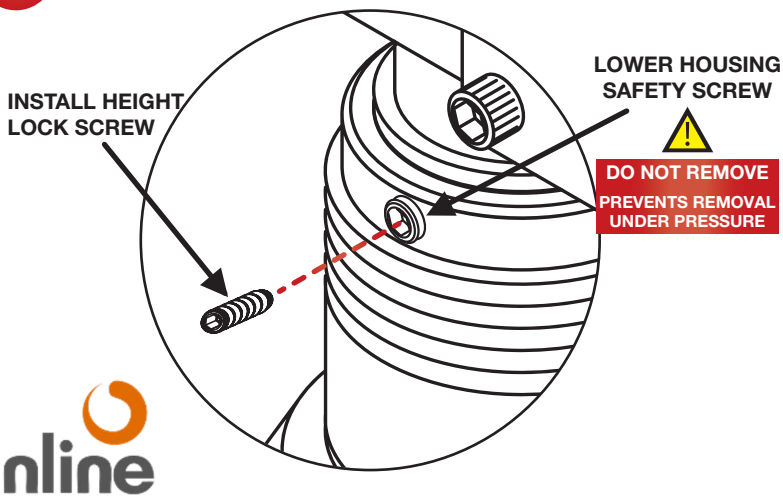

AVAILABLE AT OUR U.S. DISTRIBUTOR inline

INLINE SERVICES, LLC. | 27731 COMMERCIAL PARK DR, TOMBALL, TX 77375 | PH: 281-401-8142 | FAX: 281-401-8147
SALES@INLINESERVICES.COM | WWW.INLINESERVICES.COM